TG Series Wall & Duct

Dual Toxic Gas Sensor/Controller

UL2075 Recognized CO/NO2 Elements

NEMA 3R/IP43

Works as a Stand-Alone Controller (two SPDT relays)





DESCRIPTION

The TG UL series has the option to detect one or two gases per enclosure and has options to accommodate different mounting height requirements. All sensors come pre-calibrated with a NIST certificate of calibration and are field replaceable. All TG UL units come standard with an LCD display, RS-485 protocol or analog outputs, LED status indicators, 85db buzzer alarm, and two SPDT adjustable setpoint relays for direct control of fans and external visual/audible alarms.

APPLICATIONS

- Parking Garages
- Loading Dock Bays
- Gas-fired Rooftop Units
- Gas-fired Boilers
- Commerical Kitchens
- VRF/VRV Leak Detection
- Data Centers
- Battery Energy Storage Systems (BESS)
- Battery Rooms
- Compressed Gas Storage



TG-REM kit - mount any 2 gases at different heights; same as a single device



TG ABS Enclosure - Available with Tinted or Solid Lid Options

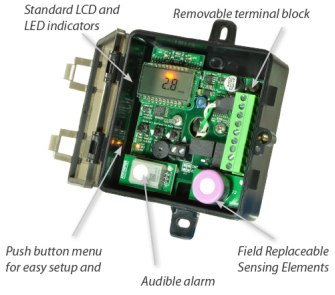

Two sensing elements, buzzer, three color LEDs, and LCD for setup and calibration

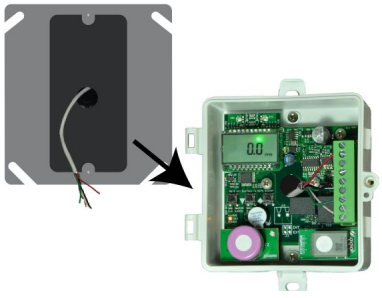

Through-back hole allows for streamlined installation in a junction box

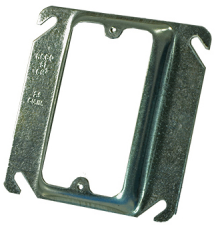

ABS version comes with handy conduit box adapter



Buy American Act Certified

FEATURES

- Rugged plastic or metal enclosure options (NEMA 3R/IP43)
- Detect one or two gases in each TG unit
- Remote moutning options for second gas
- Hole-in-back for easy J-box wiring
- NIST Pre-calibrated sensors with certificates of calibration
- LCD display
- Equipped with RS-485 or analog outputs
- LED status indicators
- 85db alarm
- Two SPDT adjustable setpoint relays (dry contacts)

ORDERING

TG ☐ - ☐ ☐ ☐ - ☐ ☐ ☐

Package
W = Wall Mount
D = Duct Mount
M = Metal

Output Type
A = Analog
B = BACnet/ Modbus

Gas Type 1*
C = Carbon Monoxide (CO)
N = Nitrogen Dioxide (NO_2)
D = Carbon Dioxide (CO_2)
E = Dual Channel CO_2
M = Methane (CH4)
P = Propane (C3H8)
H = Hydrogen (H2)
O = Oxygen (O2)
S = Hydrogen Sulphide (H2S)
A = R717 Ammonia (NH3)
*B = R454B
*2 = R22
*3 = R134A
*4 = R410A (Multi-Gas)
*5 = R404A
*6 = R407C
*7 = R449A
*8 = R513A
*9 = 1233ZDE
E = R744 (CO2)
*F = R454A
*G = 1234ZE
*J = R1234YF
*K = R452B
P = R290 Propane (C3H8)
*Q = R454C
*T = R455A
*Z = R32

Gas Type 2*
X = No second gas
1–9, A–Z = Same as Gas Type 1

Temperature
A = None
C = 100Pt RTD
D = 1000Pt RTD
E = 10K Type 2
F = 10K Type 3
G = 10k w/11k
H = 3k
I = 2k2
J = 1k8
K = 20k

Options
Blank = None
S = Solid/Opaque Lid
W = White/Solid Lid
F = Fail Open Relay

Replacement Elements

TGS-CO-ULV2 = Carbon Monoxide
TGS-NO2-ULV2 = Nitrogen Dioxide
TGS-CH4-ULV2 = Methane
TGS-C3H8-ULV2 = Propane
TGS-O2-ULV2 = Oxygen
Call / Consult factory for more options

TGS-H2-ULV2 = Hydrogen
TGS-H2S-ULV2 = Hydrogen Sulfide
TGS-A-UL = R717 Ammonia
TGS-3-UL = R134A
TGS-4-UL = R410A
TGS-x-UL (x= gas type 1 from above)

*A2L Refrigerant sensors may not be paired with CH4, C3H8, H2, or together.

Consult factory for additional refrigerant options.

TG ☐ **- REM -** ☐

Package
W = Wall Mount
M = Metal

Cable Length
05 = 5 feet
10 = 10 feet
15 = 15 feet
20 = 20 feet

TGx-REM-xx is a kit only and does not include gas sensing elements. Purchase separately from TGS 'replacement elements' section.

DIMENSIONS

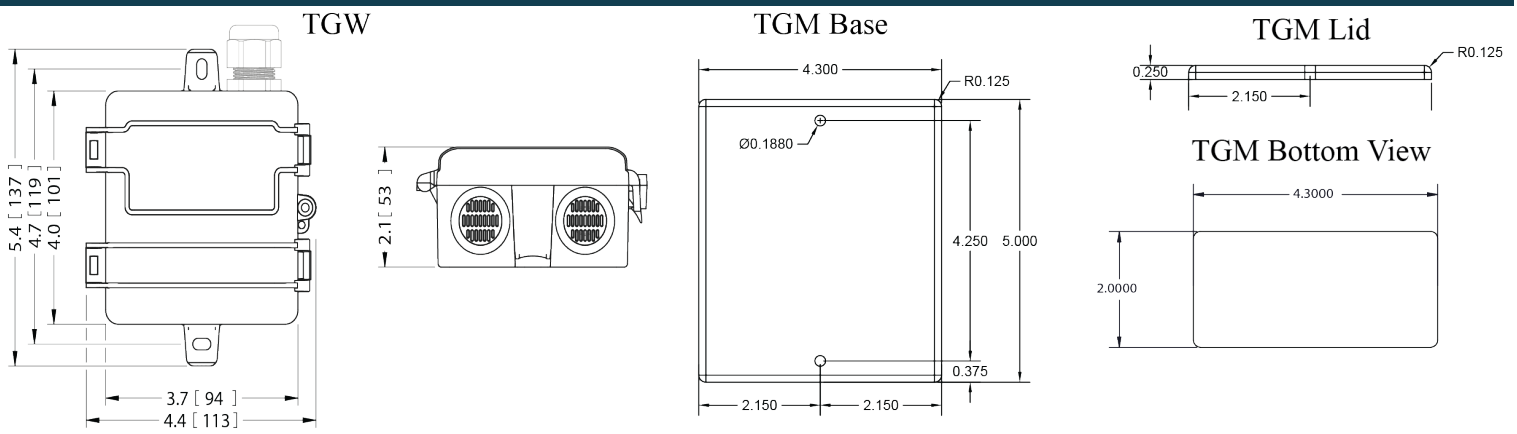

Warning: The datasheet is designed for reference only. Refer to installation instructions that accompany the product and heed all safety instructions. Product improvement is a continuing process at Senva. Changes may occur to products without prior notice.

SPECIFICATIONS

Power Supply		15-30VDC/24VAC(1), 4W max, 160mA max.
	TG-REM	Powered through CAT-5 cable, no separate power required.
Wiring	Conductor	14-24 AWG, Minimum 600V, 75°C
	Terminal Torque	0.5 N•m
Analog Outputs	2 programmable outputs	0-10V (default), 0-5V, 1-5V and 4-20mA (menu selectable)
	CO output scaling	0-200ppm (default), 0-1000ppm (menu selectable)
	NO2 output scaling	0-10ppm (default), 0-30ppm (menu selectable)
	CO2 output scaling	0-10,000 ppm (default), 0-10,000 ppm (menu selectable)
	Propane/Methane / Hydrogen Output Scaling	0-50% LEL (default), 0-50% LEL (menu selectable)
	Oxygen Output Scaling	0-25% Vol (default), 0-25% Vol (menu selectable)
	Refrigerant Output Scaling	0-1000 ppm (default), 0-1000 ppm (menu selectable)
	H2S Output Scaling	0-100 ppm (default), 0-100 ppm (menu selectable)
	Ammonia NH3 Output Scaling	0-100 ppm (default), 0-100 ppm (menu selectable)
	Temperature output scaling	-20 to 85°C
BACnet /Modbus	Protocol RS-485	BACnet MS/TP, Modbus RTU, Modbus ASCII
	Baud Rates	9600, 19200, 38400, 57600, 76800, 115200
	RS-485 Loading	1/4 unit
Fan Relay	Fan relay characteristics (Standard Version)	N.C. 1A@24/30VDC (50/60Hz) (no mains connection)
	Fan relay characteristics (Fail-Open Version)	N.O. 1A@24/30VDC (50/60Hz) (no mains connection)
	CO fan relay setpoint	25ppm (default), 0-1000 ppm (menu selectable)
	NO2 fan relay setpoint	1ppm (default), 0-30ppm (menu selectable)
Alarm Relay	Alarm relay characteristics (Standard Version)	N.C. 1A@24/30VDC (50/60Hz) (no mains connection)
	Alarm relay characteristics (Fail-Open Version)	N.O. 1A@24/30VDC (50/60Hz) (no mains connection)
	CO alarm relay setpoint	100ppm (default), 0-1000 ppm (menu selectable)
	NO2 alarm relay setpoint	3ppm (default), 0-30ppm (menu selectable)
Display	3-1/2 digit LCD	Indicates CO ppm, NO2 ppm (menu selectable)
LEDs	Green, Yellow, Red	Green = Normal, Yellow = Warning/Fan Relay, Red = Alarm/Alarm Relay
Audible Alarm	85dB Piezo transducer	30 minutes above alarm setpoint per UL2075
Exposure		(menu selectable)
CO Sensor Performance	Type	Electrochemical

	Accuracy	±5% of default range[2], ±5%of reading above 200ppm
	Resolution	1ppm
	Certifications	UL2075 Recognized Component
	Life expectancy	>7 years
	Recommended Calibration	Annual
	Recommended Height and Coverage Area	3 to 6 feet, coverage 5000-7500 square feet (Click for details)
NO_2 Sensor Performance	Type	Electrochemical
	Accuracy	±5% of default range[3] ±5%of reading above 20ppm
	Resolution	0.1ppm
	Certifications	UL2075 Recognized Component
	Life expectancy	>7 years
	Recommended Calibration	Annual
	Recommended Height and Coverage Area	3 to 6 feet, coverage 5000-7500 square feet (Click for details)
Carbon Dioxide (CO_2)	Type	Non-Dispersive Infrared (NDIR)
	Accuracy[4]	±(30ppm +3% of reading) (400-2000ppm), @-10-50°C ±(50ppm +5% of reading) Standard (2000-5000ppm), ±(50ppm+3% of reading) Dual Channel (2000-5000ppm), ±(100ppm+10% of reading) (5000-10000ppm)
	Drift with ABC Disabled [5]	35 ppm / month [6] (Standard), 5 ppm / month [6] (Dual-Channel)
	Resolution	1 ppm
	Life Expectancy	15 years
	Response Time	30s
	Sample Rate	1s
	Recommended Height and Coverage Area	3 to 6 feet, coverage area 5000-7500 square feet (Click for details)
Methane/Propane / Hydrogen Sensor Performance	Type	Catalytic
	Detection Range	0-50% LEL (Lower Explosive Limit)
	Accuracy	±5% of Range
	Resolution	1% LEL
	Certifications	UL2075 Recognized component for Methane/Propane
	Life Expectancy	>5 years
	Response Time	<10s to 90%
	Recommended Calibration	Bump test annually, calibrate or replace if necessary. [8]
	Long Term Stability Drift	Zero: <±2mV/year Sensitivity: <±2mV/month
	Recommended Height and Coverage Area	Hydrogen/Methane: 1 foot from ceiling, coverage area 5000-7500 sq. ft. Propane: 1-3 ft. above finished floor, coverage area 5000 sq. ft.
Oxygen Sensor Performance	Type	Electrochemical
	Detection Range	0-25% Volume
	Accuracy	±5% of Range
	Resolution	0.1%
	Life Expectancy	5 years
	Recommended Calibration	Annual
	Recommended Height and Coverage Area	3 to 6 feet, 5000-7500 sq. ft.
H2S Sensor Performance	Type	Electrochemical
	Detection Range	0-100 ppm
	Accuracy	±5% of Range
	Resolution	1 ppm

	Life Expectancy	5 years
	Recommended Calibration	6 months
	Recommended Height and Coverage Area	3 to 6 feet, coverage area 5000 - 7500 sq. ft.
Ammonia NH3 Sensor Performance	Type	Electrochemical
	Detection Range	0-100 ppm
	Accuracy	±5% of Range
	Resolution	0.1 ppm
	Life Expectancy	5 years
	Recommended Calibration	6 months
	Recommended Height and Coverage Area	0.5 to 1 foot from ceiling, coverage 5000 - 7500 sq. ft.
Refrigerant Sensor Performance	Type	MOS
	Detection Range	0-1000 ppm
	Resolution	1 ppm
	R22, R134A, R410A, R404A, R407C	Calibrated for respective gas.
	R134 Sensitivity (7)	@ 300 ppm test gas: 450 ppm R410A, 425 ppm R407C, 400 ppm R404A, 370 p
	Other Detectable Gases	R407A, R407F, R427F, R452B, R507, R448A, R454B, R455A, R455C, R422A, R422 Consult factory for other A2L gases.
	Life Expectancy	10 years (typical expectation for MOS sensors)
	Recommended Calibration	6 months
	Recommended Height and Coverage Area	6 inches above floor, no more than 18 inches above lowest level of equipment detection, coverage 5000 - 7500 sq. ft.
Operating Environment	Temperature, Continuous	-20 to 50°C (-4 to 122°F) (CO_2 versions rated to -40°C)
	Humidity	15-95% continuous, 0-95% intermittent
	Max Elevation	2000m
Enclosure (Wall & Duct)	Material	ABS/Polycarbonate
	Dimensions	4.0”h x 4.4”w x 2.1”d (+6.8” probe for duct version)
	Conduit Opening	Tapped 1/2” NPT
	Rating	IP43 or NEMA 3R
Enclosure (Metal)	Material & Enclosure Rating	Powder-coated steel
	Dimensions	5.0”h x 4.3”w x 2.25”d
	Opening	Dual air vents on front lid of enclosure
	Mounting	Pre-drilled for 2x4” electrical box
	Rating	IP41 or NEMA 3R
Agency	Compliance	UL61010-1 Listed UL, cUL, CE, UL2075 Recognized CO and NO2 elements

(1) One side of transformer secondary is connected to signal common. Dedicated transformer is recommended. No mains circuit connection allow required to use an isolated power supply that is certified by a national or international standard (i.e. UL). Use of a Class 2 LPS power supply or grea
(2) Carbon Monoxide full scale is 1000ppm.
(3) Nitrogen Dioxide full scale is 30ppm.
(4) Accuracy of CO2 reading may be reduced at temperatures below 14ºF (-10°C). CO2 sensor is equipped with a heater to account for temperatu
(5) It is not recommended to de-activate ABC (auto-calibration) except for continuously occoupied spaces or greenhouses. Drift ratings may vary I
(6) Combination CO/Methane, Co/Propane, or CO/Refrigerant sensors should be mounted according to Propane/Methane/Refrigerant recommen factory for other combinations. Mounting height recommendations may be adjusted according to installation. Ensure sensor is accessible for mair has unobstructed access to sensor. Mount in accordance with ANSI/NFPA 70 and NEC or CEC.
(7) R134A sensor may be used as a general purpose refrigerant detection. The sensor's response to other refrigerants will change proportionally a following app note: https://www.senvainc.com/catalog/documents/downloadcenter/Refrigerant%20cross%20sensitivities.pdf Actual response may installation. For more accurate response to a specific gas, a unit may be field calibrated.
(8) A bump test involves exposing the sensor to a reference gas and detecting the sensor’s response. If sensor response is out of accuracy range, r replacement of the sensor element may be necessary.

** Product improvement is a continual process at Senva and product features and specification may change without prior notice. Refer to instructions that accompany the product for installation and wiring.*