TGR Series

TGR Sensor/Controller | A2L Refrigerant + CO Detection



UL2075 CO/NO2 elements, combustibles, and most A2L & A3 gases
SenvaSync App for easy settings configuration
Factory-calibrated and certified sensing elements
BACnet MS/TP protocol or analog outputs

Modbus · BACnet · RoHS · SENVA SYNC COMPATIBLE

DESCRIPTION

The TGR is a recessed dual-gas sensor/controller built for the two most common gas compliance scenarios in commercial buildings: CO safety monitoring in spaces served by gas-fired RTUs (required by ASHRAE 62.1, IMC, and many state codes) and A2L and legacy refrigerant leak detection in VRF-served occupied spaces per ASHRAE 15 and the 2024 IMC. The SenvaSync app allows for consistent setup, even without power! Dual daisy-chainable 0–10V, 0–5V, or 4–20 mA outputs enable cost-effective coverage of large areas without additional controllers, or choose RS485 for BACnet MS/TP and Modbus RTU protocols. All models feature two independently configurable relays, an 85 dB audible alarm, tri-color LED status indication, and field-replaceable, factory-calibrated and certified sensing elements for quick, documented commissioning.

APPLICATIONS

- A2L and legacy refrigerant leak detection in VRF/VRV-served occupied spaces
  - o Hotels, multi-family, dormitories, and office buildings
  - o ASHRAE 15 and 2024 IMC compliance
- CO safety monitoring in schools, gyms, and commercial buildings with gas-fired RTUs
  - o IMC, and state CO detection compliance
- CO + NO_2 monitoring in enclosed parking garages
  - o IMC Section 404.1 compliance with UL2075 recognized components
- Alert occupants of elevated gas levels
- Directly VFD or exhaust fan control



Modern, low-profile, tamper-proof enclosure - great for schools and high-traffic areas



Magnetic calibration adaptor for fast, tool-free field calibration



Made in the USA - 7 year warranty on electronics, buy American Act certified

FEATURES

- No DIP switches, no magnetic wand, no laptop
- **UL2075** listed CO sensing element meets code requirements for commercial CO detection in schools, offices, and commercial buildings
- **A2L** ready! Pre-calibrated for R-32, R-454A, R-454B, R-454C, R-452B, R455A, R-22, R-404A, R-407C, R134A, and more
- Fits a **standard j-box**
- Built-in **BACnet MS/TP** or dual daisy-chainable **analog** outputs (0–10V, 0–5V, or 4–20 mA)
- Two independent, configurable relays
- Tamper resistant enclosure, great for schools and high-traffic areas
- 7-year limited warranty on electronics; 2-year warranty on sensor elements

Applications

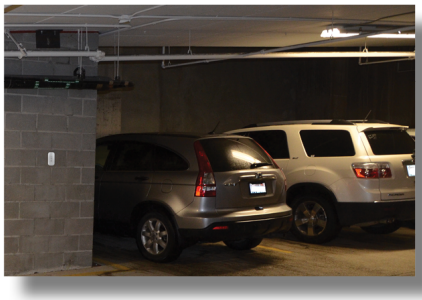

Detect exhaust in parking garages with CO/NO2

- Low profile design fits standard j-box



Monitor VRV/VRF systems by sensing any standard refrigerant

- Built-in buzzer alerts occupants of leaks; hidden capactive reset

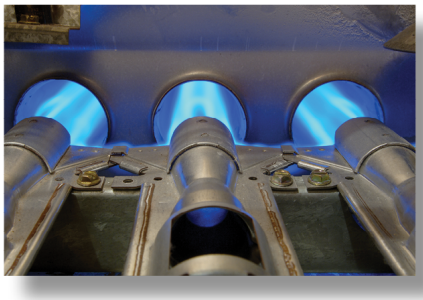

Combine CO/CO2 for classrooms with gas RTUs

- Meet requirements for CO sensing in classrooms while also measuring CO2 for occupancy and ventilation control



Protect commercial kitchens with CO/Methane sensing

- Meet NFPA 720 with an IP54 rated device for the most challenging envornments



Safeguard battery storage rooms with H2 detection

- Meet NFPA 111 requirements for H2 detection in battery rooms. UPS' can be dangerous if not properly monitored



Sense excess O2 levels in compressed gas storage rooms

- Sense for too much or too little O2; both can signal a problem

ORDERING

TGR - ☐ ☐ ☐

Output Type
A = Analog
B = BACnet/Modbus

Gas Type 1
C = Carbon Monoxide (CO)
D = Carbon Dioxide (CO_2)
E = Dual Channel CO2
N = Nitrogen Dioxide (NO_2)
M = Methane (CH_4)
P = Propane (C_3H_8)
H = Hydrogen (H_2)
O = Oxygen (O_2)
S = Hydrogen Sulfide (H_2S)
A = Ammonia
2 = R22*
4 = R410A* (Multi-Gas)
5 = R404A*
6 = R407C*
7 = R449A*
8 = R513A*
9 = 1233ZDE*
Z = R32*
F = R454A*
B = R454B*
Q = R454C*
G = 1234ZE*
J = R1234YF*
K = R452B*
T = R455A*

Gas Type 2
X = No second gas
D = Carbon Dioxide (CO_2)
E = Dual Channel (CO_2)
N = Nitrogen Dioxide (NO_2)
M = Methane (CH_4)
P = Propane (C_3H_8)
H = Hydrogen (H_2)
O = Oxygen (O_2)
S = Hydrogen Sulfide (H_2S)
A = Ammonia

Replacement Elements
TGS-CO-ULV2 = Carbon Monoxide
TGS-NO2-ULV2 = Nitrogen Dioxide
TGS-CH4-ULV2 = Methane
TGS-C3H8-ULV2 = Propane
TGS-O2-ULV2 = Oxygen
TGS-H2-ULV2 = Hydrogen
TGS-H2S-ULV2 = Hydrogen Sulfide

*Refrigerant gas sensors can ONLY be ordered as a stand-alone single element.

Scan here for TG UL Sensor Placement and Coverage Area

Scan here for Refrigerant Cross-Sensitivities

Scan here for Understanding Cross-Sensitivities

Warning: *Applications of sensor combinations appropriateness should be considered when specifying a sensor and it's placement. Always comply with all national and local codes.*

DIMENSIONS

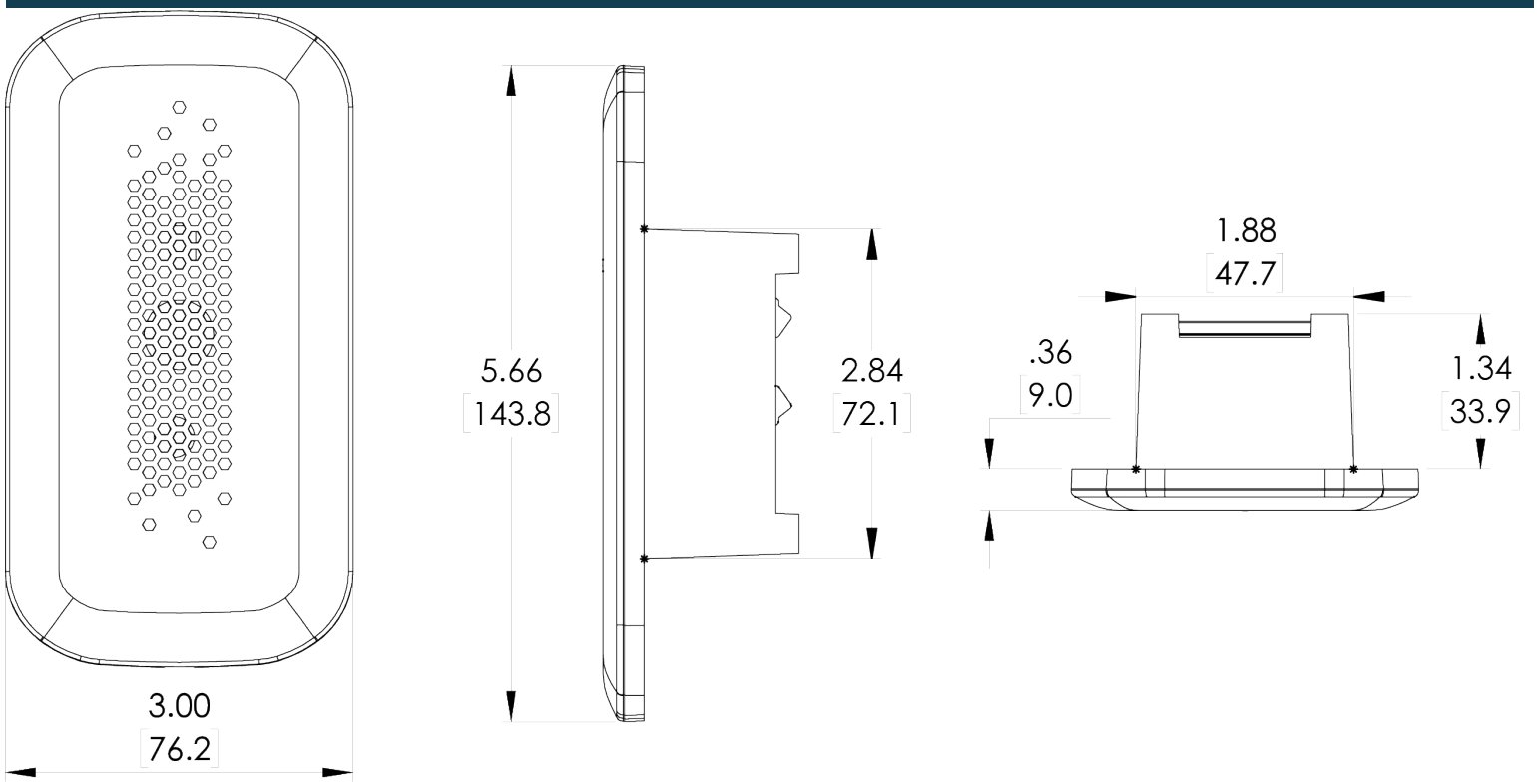

Warning: The datasheet is designed for reference only. Refer to installation instructions that accompany the product and heed all safety instructions. Product improvement is a continuing process at Senva. Changes may occur to products without prior notice.

SPECIFICATIONS

Power Supply	Comms	16-30VDC/24VAC(1), 5W max, 200mA max.
	Analog	12-30VDC/24VAC(1), 5W max, 200mA max.
Wiring	Conductor	14-24 AWG, Minimum 600V, 75°C
	Terminal Torque	0.5 N•m
Outputs (Analog)	2 programmable outputs	0-10V, 0-5V, and 4-20mA(2) (selectable)
	CO Output Scaling	0-200ppm (default), 0-500ppm (menu selectable)
	NO2 Output Scaling	0-10ppm (default), 0-10ppm (menu selectable)
	CO2 Output Scaling	0-10,00ppm (default), 0-10,00ppm (menu selectable)
	Propane/Methane/Hydrogen Output Scaling	0-50% LEL (default), 0-50% LEL (Menu Selectable)
	Oxygen Output Scaling	0-25% Vol (default), 0-25% Vol (menu selectable)
	Refrigerant Output Scaling	0-1000ppm (default), 0-1000ppm (menu selectable)
	H2S Output Scaling	0-100ppm (default), 0-100ppm (menu selectable)
	Ammonia NH3 Output Scaling	0-100ppm (default), 0-100ppm (menu selectable)
	Temp Output Scaling (optional)	20 to 85°C
BACnet /Modbus	Protocol RS-48	BACnet MS/TP, Modbus RTU
	Baud Rates	9600, 19200, 38400, 57600, 76800, 115200
	RS-485	1/4 unit
Trouble Relay	Trouble Relay characteristics	N.C. 1A@24VAC/30VDC (50/60Hz) (no mains connection)
Alarm Relay	Alarm relay characteristics	N.O. 1A@24VAC/30VDC (50/60Hz) (no mains connection)
LED	Green, Yellow, Red	Green = Normal, Yellow = Warning, Red = Alarm
Audible Alarm Exposure	85dB Piezo transducer	30 minutes above alarm setpoint per UL2075; tamper-proof silence/reset button (menu selectable)

CO Sensor Performance	Type	Electrochemical
	Accuracy	±5% of default range(3) ±5%of reading above 200ppm
	Resolution	1ppm
	Certifications	UL2075 Listed Component
	Life expectancy	>7 years
	Recommended Calibration	Annual
	Recommended Height	3 to 6 feet; coverage 5000-7500 sq ft.
NO2 Sensor Performance	Type	Electrochemical
	Accuracy	±5% of default range(4) ±5%of reading above 20ppm
	Resolution	0.1ppm
	Life expectancy	>7 years
	Recommended Calibration	Annual
	Recommended Height	3 to 6 feet; coverage 5000-7500 sq ft.
Carbon Dioxide (CO2)	Type	Non-Dispersive Infrared (NDIR)
	Accuracy (5)	±(30ppm +3% of reading) (400-2000ppm), @-10-50°C
		±(50ppm +5% of reading) Standard (2000-5000ppm), @-10-50°C
		±(50ppm+3% of reading) Dual Channel (2000-5000ppm), @-10-50°C
		±(100ppm+10% of reading) (5000-10000ppm), @0-50°C
	Drift with ABC disabled (6)	35ppm/month (6) (Standard) 5ppm/month (6) (Dual Channel)
	Range	0-2000/5000ppm; Programmable up to 10,000ppm
	Response time	30 s
	Sample rate	1 s
	Recommended Height	3 to 6 feet; coverage 5000-7500 sq ft.
	Resolution	1 ppm
	Life expectancy	15 years
Methane/Propane/Hydrogen Sensors Performance	Type	Catalytic
	Detection Range	0-50% LEL (Lower Explosive Limit)
	Accuracy	5% of range
	Resolution	1%LEL
	Life expectancy	>5 years
	Recommended Calibration	Bump test annually, calibrate or replace if necessary (12)
	Recommended Height	Hydrogen/Methane: 0.5 to 1 foot from ceiling; coverage 5000-7500 sq ft
		Propane: 1-3 ft. above finished floor, coverage area 5000 sq. ft.
Oxygen Sensor Performance	Type	Electrochemical
	Detection Range	0-25% Volume
	Accuracy	±5% of range
	Resolution	0.1%
	Life expectancy	5 years
	Recommended Calibration	Annual
	Recommended Height	3 to 6 feet; coverage 5000-7500 sq ft
H2S Sensor Performance	Type	Electrochemical
	Detection Range	0-100 ppm
	Accuracy	±5% of range
	Resolution	1 ppm
	Life expectancy	5 years
	Recommended Calibration	6 months
	Recommended Height	3 to 6 feet; coverage 5000-7500 sq ft

Ammonia Sensor Performance	Type	Electrochemical
	Accuracy	±5% of range
	Resolution	0.1 ppm
	Life expectancy	5 years
	Recommended Calibration	6 months
	Recommended Height	0.5 to 1 foot from ceiling; coverage 5000-7500 sq ft
Refrigerant Sensor Performance	Type	Electrochemical
	Detection Range	0-25% Volume
	Resolution	1 ppm
	R134A Sensitivity (6)	@300ppm test gas: 450 ppm R410A, 425 ppm R407C, 400 ppm R404A, 370 ppm R22, 300 ppm R134A
	Other detectable gases (8)	R407A, R407F, R427A, R507, R448A, R422A, R422D, R452A, R514A
	Life expectancy	>10 years (typical life expectancy for MOS sensors)
	Recommended Calibration	6 months
	Recommended Height	6 inches above floor; no more than 18 inches above lowest level of equipment location for leak detection; coverage 5000-7500 sq ft.
	Max Elevation (9)	2629 m (8625 ft)
Operating Environment	Temperature, continuous	-20 to 50°C
	Humidity	15-90% continuous, 0-99% intermittent
	Max Elevation	2000m
Enclosure	Material	ABS/Polycarbonate
	Dimensions	5.7”h x 3.0” x 1.8”d
	Rating	IP20
Agency	Compliance	RoHS

(1) One side of transformer secondary is connected to signal common. Dedicated transformer is recommended. No mains circuit connection allowed. In addition, it is required to use an isolated power supply that is certified by a national or international standard (i.e. UL). Use of a Class 2 LPS power supply or greater is required.
(2)Extreme temperatures may affect accuracy when using 4-20mA outputs.
(3) Carbon Monoxide full scale is 1000ppm.
(4) Nitrogen Dioxide full scale is 30ppm.
(5) Accuracy of CO2 reading may be reduced at temperatures below 14ºF (-10ºC).
(6) Refrigerant sensor may only be ordered as a single element sensor. It cannot be combined with other sensors.
(7)R134A sensor is factory calibrated to R134A gas but may be used as a general purpose refrigerant sensor. Sensitivity to some other gases can be found in the installation manual. Actual response may vary depending on installation. For more accurate response to a specific gas, a unit may be field calibrated.
(8) These gases my be detected by the sensor but sensitivity curves are not available at this time.
(9) Refrigerant sensors have been tested to perform at this altitude. To maintain accuracy spec, a field calibration is recommended.

(10) It is not recommended to de-activate ABC (auto-calibration) except for continuously occupied spaces or greenhouses. Drift ratings may vary based on environment.

(11) Combination CO/Methane, CO/Propane, or CO/Refrigerant sensors should be mounted according to Propane/Methane/Refrigerant recommendations. Consult factory for other combinations. Mounting height recommendations may be adjusted according to installation. Ensure sensor is accessible for maintenance and target gas has unobstructed access to sensor. Mount in accordance with ANSI/NFPA 70 and NEC or CEC.

(12) A bump test involves exposing the sensor to a reference gas and detecting the sensor’s response. If sensor response is out of accuracy range, recalibration or replacement of the sensor element may be necessary.

** Product improvement is a continual process at Senva and product features and specification may change without prior notice. Refer to instructions that accompany the product for installation and wiring.*